OFFICIAL QUOTE

330KVA 240 VOLTS TO 120/240 VOLTS SINGLE PHASE ISOLATION TRANSFORMER

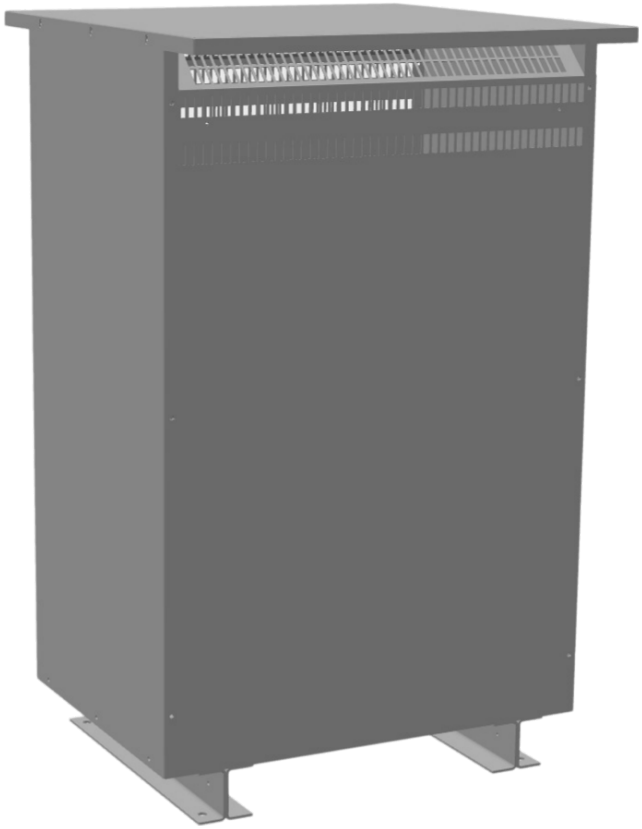

330KVA 240 VOLTS TO 120/240 VOLTS SINGLE PHASE ISOLATION TRANSFORMER

$17,191.94 CAD

Single Phase Isolation Transformer with a capacity of 330kVA, transforming 240 Volts to 120/240 Volts

SKU: SA330C-K/Z3
Categories: Isolation Transformers

SCHEMATIC/DIAGRAM AND DIMENSION PICTURES

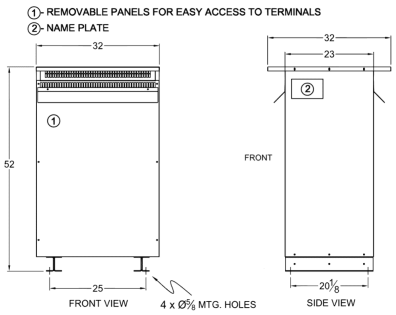

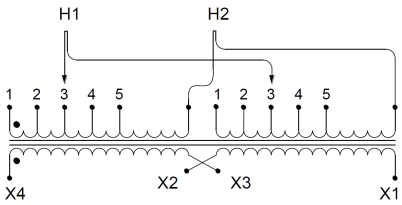

Single Phase Isolation Transformer with a capacity of 330kVA, transforming 240 Volts to 120/240 Volts

PRODUCT SPECIFICATIONS

Weight	1550 lbs
Phases	1
kVA	330
Connection	1Ph-2coil-5t-SD
Primary Voltage	240
Primary Max Current	1375.0A
Primary Markings	H1-H2
Primary Terminals	Pads
Secondary Voltage	120/240
Secondary Max Current	2750.0A
Secondary Markings	X1-X2
Secondary Terminals	Pads
Primary Taps	+/- 2 x 2.5%
Conductor Material	Aluminum
BIL (Insulation) Level	10kV
Efficiency (@35% Load) %	98.90% (DOE 2016/NRCan 2019)
Impedance Range	4.0 – 6.0%
Sound (db)	55
Enclosure Type	NEMA 3R Indoor
Enclosure Size	E3R-9S
Finish/Colour	Polyester Powder Coat – ANSI/ASA 61 Grey
Standards & Certifications	CSA Certified File No. LR34493, UL Listed File No. E108255, ISO 9001:2015 Registered
Temperatue Rise	150°C

Insuation Class	150°C
Country/Manufacturer	Canada/RPM
Finish/Colour	Polyester Powder Coat – ANSI/ASA 61 Grey