OFFICIAL QUOTE

200KVA 550 VOLTS TO 120/240 VOLTS SINGLE PHASE ISOLATION TRANSFORMER

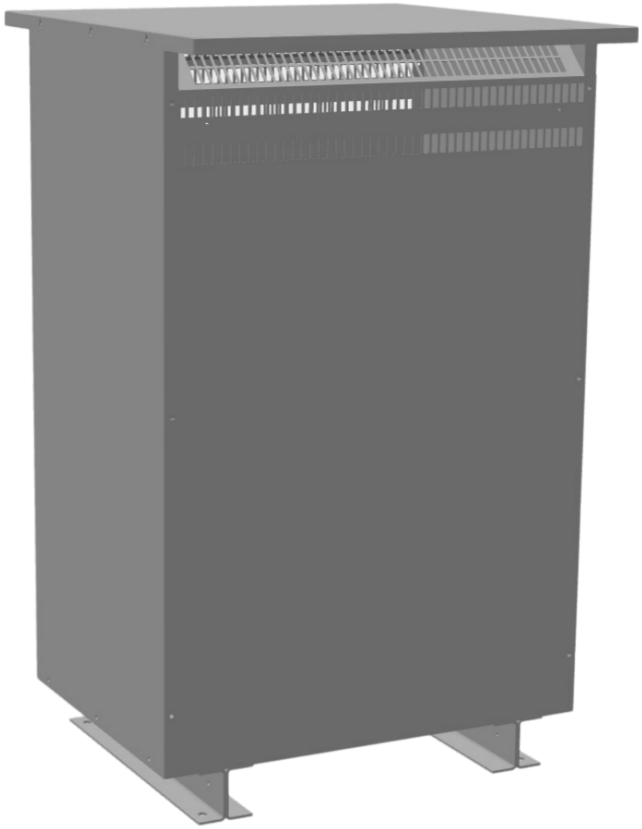

200KVA 550 VOLTS TO 120/240 VOLTS SINGLE PHASE ISOLATION TRANSFORMER

$12,319.69 CAD

Single Phase Isolation Transformer with a capacity of 200kVA, transforming 550 Volts to 120/240 Volts

SKU: SA200J2-K/Z3
Categories: Isolation Transformers

SCHEMATIC/DIAGRAM AND DIMENSION PICTURES

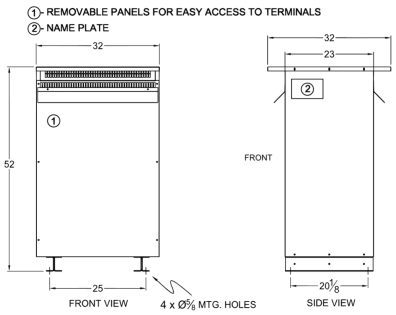

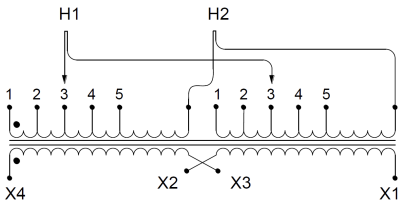

Single Phase Isolation Transformer with a capacity of 200kVA, transforming 550 Volts to 120/240 Volts

OFFICIAL QUOTE

200KVA 550 VOLTS TO 120/240 VOLTS SINGLE PHASE ISOLATION TRANSFORMER

PRODUCT SPECIFICATIONS

Weight	1015 lbs
Phases	1
kVA	200
Connection	1Ph-2coil-5t-SD
Primary Voltage	550
Primary Max Current	363.64A
Primary Markings	H1-H2
Primary Terminals	Pads
Secondary Voltage	120/240
Secondary Max Current	1666.67A
Secondary Markings	X1-X2
Secondary Terminals	Pads
Primary Taps	+/- 2 x 2.5%
Conductor Material	Aluminum
BIL (Insulation) Level	10kV
Efficiency (@35% Load) %	98.74% (DOE 2016/NRCan 2019)
Impedance Range	4.0 – 6.0%
Sound (db)	55
Enclosure Type	NEMA 3R Indoor
Enclosure Size	E3R-9S
Finish/Colour	Polyester Powder Coat – ANSI/ASA 61 Grey
Standards & Certifications	CSA Certified File No. LR34493, UL Listed File No. E108255, ISO 9001:2015 Registered
Temperatue Rise	150°C

OFFICIAL QUOTE

200KVA 550 VOLTS TO 120/240 VOLTS SINGLE PHASE ISOLATION TRANSFORMER

Insuation Class	150°C
Country/Manufacturer	Canada/RPM
Finish/Colour	Polyester Powder Coat – ANSI/ASA 61 Grey