OFFICIAL QUOTE

330KVA 575 VOLTS TO 550 VOLTS SINGLE PHASE ISOLATION TRANSFORMER

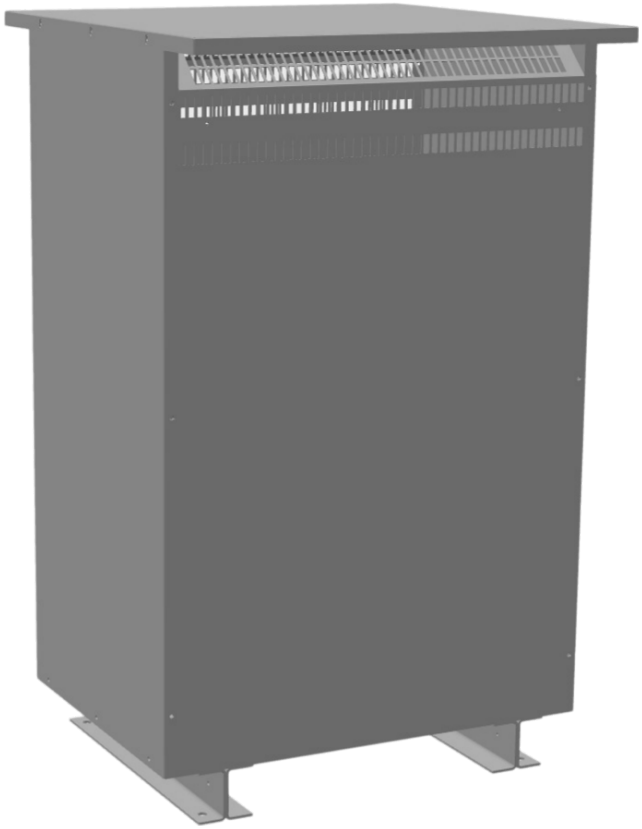

330KVA 575 VOLTS TO 550 VOLTS SINGLE PHASE ISOLATION TRANSFORMER

$26,130.94 CAD

Single Phase Isolation Transformer with a capacity of 330kVA, transforming 575 Volts to 550 Volts

SKU: SC330J1-J2/Z3
Categories: Isolation Transformers

SCHEMATIC/DIAGRAM AND DIMENSION PICTURES

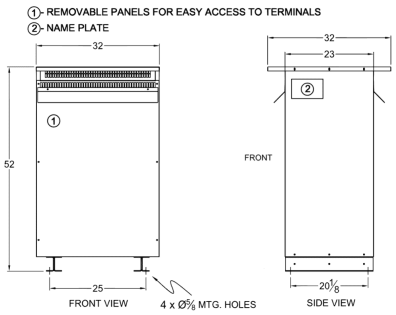

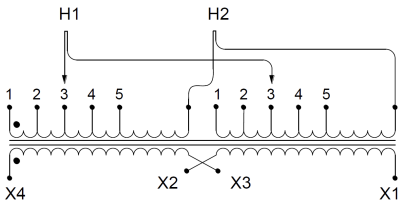

Single Phase Isolation Transformer with a capacity of 330kVA, transforming 575 Volts to 550 Volts

PRODUCT SPECIFICATIONS

Weight	1720 lbs
Phases	1
kVA	330
Connection	1Ph-2coil-5t-SD
Primary Voltage	575
Primary Max Current	573.91A
Primary Markings	H1-H2
Primary Terminals	Pads
Secondary Voltage	550
Secondary Max Current	600.0A
Secondary Markings	X1-X2
Secondary Terminals	Pads
Primary Taps	+/- 2 x 2.5%
Conductor Material	Copper
BIL (Insulation) Level	10kV
Efficiency (@35% Load) %	98.90% (DOE 2016/NRCan 2019)
Impedance Range	4.0 – 6.0%
Sound (db)	55
Enclosure Type	NEMA 3R Indoor
Enclosure Size	E3R-9S
Finish/Colour	Polyester Powder Coat – ANSI/ASA 61 Grey
Standards & Certifications	CSA Certified File No. LR34493, UL Listed File No. E108255, ISO 9001:2015 Registered
Temperatue Rise	150°C

Insuation Class	150°C
Country/Manufacturer	Canada/RPM
Finish/Colour	Polyester Powder Coat – ANSI/ASA 61 Grey